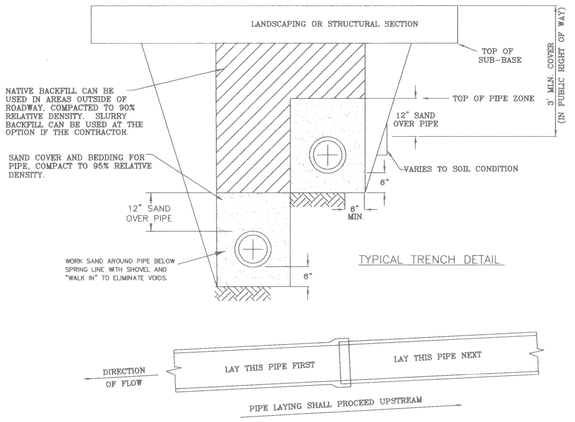

NOTE:

1. SERVICE LATERALS MUST BE AT LEAST 4" IN DIAMETER. ALL OTHER LINES MUST BE AT 6" IN DIAMETER.
2. THE LENGTH OF SERVICE LATERAL WHICH EXTENDS BEYOND THE PUBLIC RIGHT OF WAY DOES ONT REQUIRE COMPACTED BACKFILL ABOVE THE TOP OF PIPE ZONE UNLESS PAVEMENT IS TO BE PLACED ABOVE IT.
3. SAND BED MUST BE LAID BEFORE PIPE.
4. PIPE MAY BE SHADED BEFORE INSPECTION. HOWEVER, JOINTS MUST BE EXPOSED.
5. FABRICATED JOINTS SHALL NOT BE USED.

PIPE LAYING DETAIL

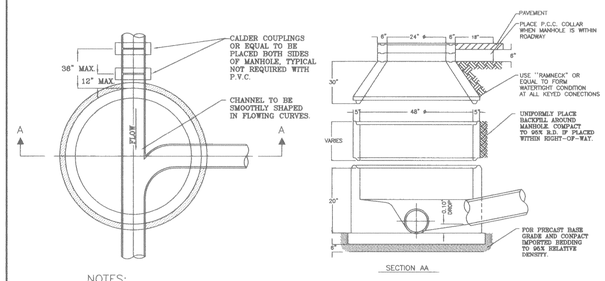

NOTES:

1.) IF ELEVATION DIFFERENCE BETWEEN INLET AND OUTLET INVERT EXCEEDS 36", USE AN SS-03 DROP MANHOLE (OR SS-03A WITH APPROVAL OF ENGINEER).

2.) FOR A POURED IN PLACE BASE, THE BARREL OR RING FORM TEMPLATE MUST BE USED TO MAKE AN INDENTATION IN THE BASE.

3.) ALL CONCRETE USED SHALL HAVE A MINIMUM 28 DAY COMPRESSIVE STRENGTH OF 3000 P.S.I.

4.) MANHOLES SHALL BE LEAK TESTED PER CITY SPECIFICATIONS.

5.) FINAL RIM ELEVATION OF MANHOLE TO BE FIELD ESTABLISHED.

6.) TOP OF MANHOLE TO BE FITTED WITHIN STANDARD SS-04 OR SS-05 ASSEMBLY.

7.) THE INVERT OUT OF THE MANHOLE SHALL BE 0.10 FEET BELOW THE INVERT(S) INTO THE MANHOLE.

8.) THE ELEVATION OF EACH INLET PIPE SHALL BE SET BY ADJUSTING THE GRADE OF THE INLET PIPE OR EMPLOYING A VERTICAL CURVE TO MAINTAIN THE 0.10 FOOT DROP.

9.) MANHOLE BASE SHALL BE PRECAST EXCEPT AS ALLOWED UNDER NOTES.

10.) A CAST IN PLACE BASE MAY BE USED ONLY IF CONDITIONS PRECLUDE THE USE OF A PRECAST BASE AND ONLY WITH THE PRIOR APPROVAL OF THE DIRECTOR OF PUBLIC WORKS. A CAST IN PLACE BASE SHALL MEET THE FOLLOWING REQUIREMENTS:

A. THE BASE SHALL BE CAST IN A SINGLE POUR.

B. ALL CONCRETE USED SHALL HAVE A MINIMUM 28 DAY COMPRESSIVE STRENGTH OF 3000 PSI AND A SLUMP OF 2 INCHES.

C. THE BARREL OR A RING FORM TEMPLATE MUST BE USED TO MAKE AN INDENTATION IN THE BASE OR, AT THE OPTION OF THE CONTRACTOR, THE FIRST BARREL MAY BE PLACED DIRECTLY IN THE WET BASE AND THE CONCRETE MOUNDED 4 INCHES ABOVE THE JOINT AND PACKED TIGHTLY BOTH INSIDE AND OUTSIDE OF THE BARREL.

11.) WHEN MANHOLE IS LOCATED OUTSIDE OF PAVED AREAS, CEMENT GROUT SHALL BE PLACED AROUND CIRCUMFERENCE OF CASTING AND UPPERMOST GRADE RING AS DIRECTED BY THE ENGINEER.

SANITARY SEWER MANHOLE DETAIL

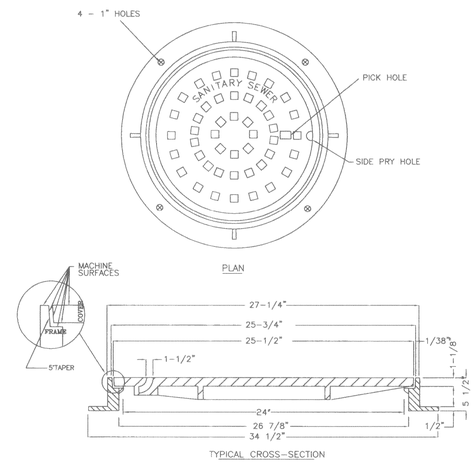

NOTE: MANHOLE ASSEMBLY, CAST IRON, A-1032 D&L SUPPLY W/BLIND PICK HOLE TO PREVENT INFILTRATION (OR APPROVED EQUAL)

SS MANHOLE COVER DETAIL

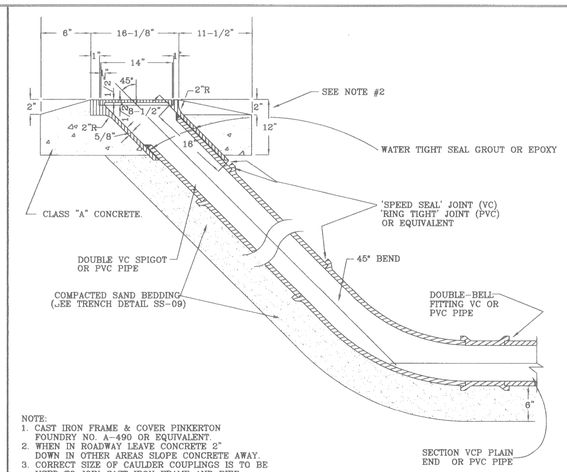

NOTE:
1. CAST IRON FRAME & COVER PINKERTON FOUNDRY NO. A-490 OR EQUIVALENT.
2. WHEN IN ROADWAY LEAVE CONCRETE 2" DOWN IN OTHER AREAS SLOPE CONCRETE AWAY.
3. CORRECT SIZE OF CAULDER COUPLINGS IS TO BE USED TO JOIN CAST IRON FRAME AND PIPE..
4. COMPACTION AROUND PIPE TYPICAL AS PER OTHER SPECIFICATIONS.

STANDARD CLEANOUT DETAIL

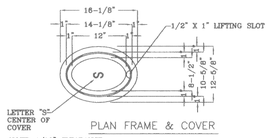

NOTE: 1/16" CLEARANCE BETWEEN COVER & FRAME

SANITARY SEWER CLEANOUT

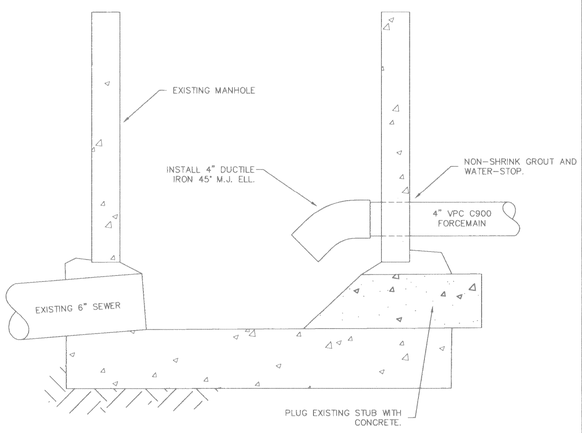

NOTES:
1. 45° ELL SHALL BE DUCTILE IRON MECHANICAL JOINT FITTING.
2. CONTRACTOR SHALL USE WATER-STOP AND NON-SHRINK GROUT AROUND CONNECTION OF 4" PVC C900 FORCE MAIN AND WALL OF EXISTING SEWER MANHOLE.

FORCE MAIN DISCHARGE DETAIL

BLANK

BLANK

BLANK

DATE	NO.	REVISION	BY	APP'D

FIELD BOOK

ELEVATION DATUM
TOP OF HYDRANT ON WEST SIDE OF 5TH AVE. 60'± SOUTH OF RAILROAD TRACKS.
CITY OF OROVILLE DATUM: ELEV=159.96

DATE	2/1/00
DRAWN	LFG
DESIGNED	LFG
CHECKED	KCL
SCALE	1"=40'

GDA ENGINEERING SURVEYING PLANNING
220 GRAND AVENUE OROVILLE, CA. (530)533-2068

GEORGIA PACIFIC WAY SANITARY SEWER EXTENSION

DETAILS SHEET

CITY OF OROVILLE

SHEET 4 OF 5 SHEETS

JOB NO. 99056

SS 351